GS/I RA 25S4 1150X525

STAINLESS STEEL

GS/I

Inox AISI 304 electropolished stainless steel is used for all metal sheet parts, while the pump is made of brass, as all other castings.

HYDRAULIC PUMP MADE OF BRASS

In the Inox version the hydraulic pump is made of brass to offer maximum resistance to humidity and oxidation.

ELECTROPOLISHING

The use of Inox AISI 304, combined with an electropolishing surface treatment, provides the machine with better appearance. Optimum resistance to corrosion also guarantees maximum hygiene.

www.pramac.com

Description			
1.1 Manufacturer			LIFTER
1.3 Drive			Manual
1.4 Operator type			Pedestrian
1.5 Load capacity	Q	Kg	2500
1.6 Load centre distance	c	mm	600
1.8 Load axle to end forks	x	mm	932
1.9 Wheel base	y	mm	1192

Weights			
2.1 Service weight		Kg	69
2.2 Axle load, laden rear		Kg	1798
2.2 Axle load, laden front		Kg	771
2.3 Axle load, unladen front		Kg	46
2.3 Axle load, unladen rear		Kg	23

Tyres/Chassis			
3.1 Tyres: front wheels			NYLON EXTRA
3.1 Tyres: rear wheels			NYLON EXTRA
3.2 Tyre size: Steering wheels - Diameter		mm	200
3.2 Tyre size: Steering wheels - Width		mm	50
3.3 Tyre size: Load rollers - Diameter		mm	82
3.3 Tyre size: Load rollers - Width		mm	60
3.5 Tyre size: rear wheels - Q.ty (X=driven)		nr	4
3.5 Rear balancing axle			No
3.6 Tread, front	b10	mm	155
3.7 Tread, rear	b11	mm	375

Dimensions			
4.4 Lift height	h3	mm	115
4.9 Height of tiller in drive position max	h14	mm	1160
4.15 Height, lowered	h13	mm	85
4.19 Overall lenght	l1	mm	1550
4.20 Lenght to face of forks	l2	mm	400
4.21 Overall width	b1	mm	525
4.22 Fork dimensions - Thickness	s	mm	50
4.22 Fork dimensions - Width	e	mm	150
4.22 Fork dimensions - Lenght	l	mm	1150
4.25 Distance between fork arms	b5	mm	525
4.32 Ground clearance, centre of wheelbase	m2	mm	35
4.34 Aisle width	Ast	mm	1835
4.35 Turning radius	Wa	mm	1367

Performance data		
5.2 Lifting speed laden	strokes	13
5.2 Lifting speed unladen	strokes	13

www.pramac.com

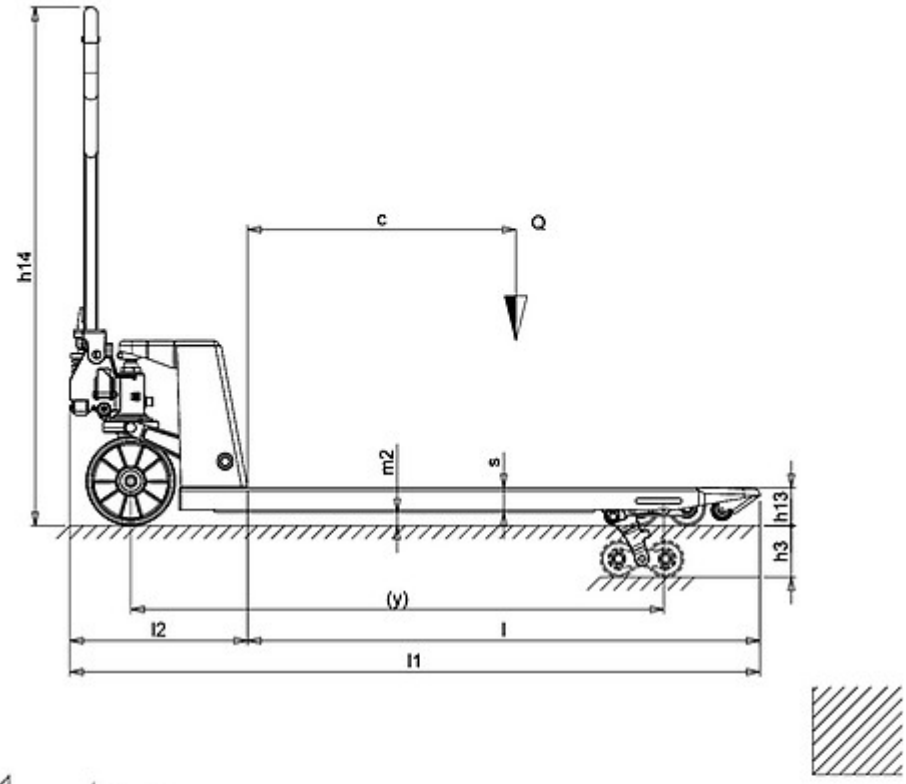

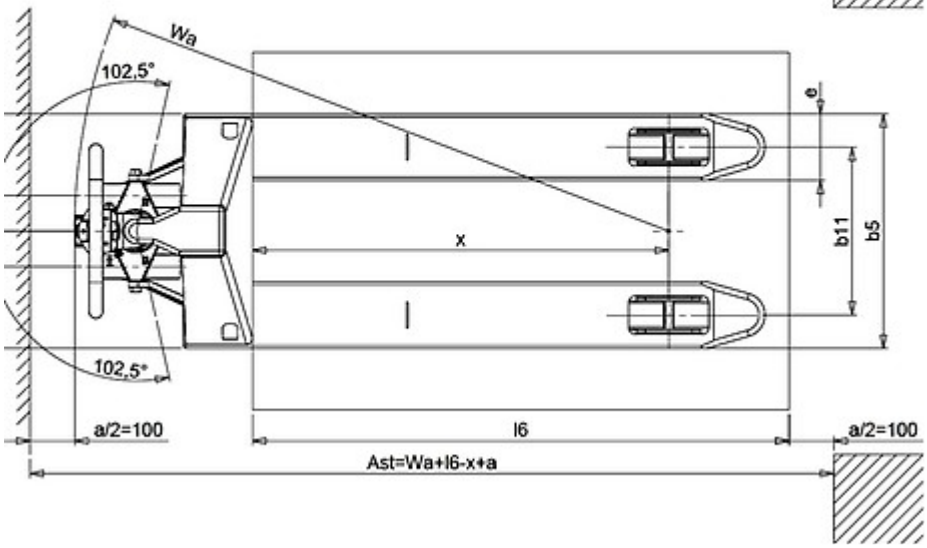

www.pramac.com

The information is aligned with the Data file at the time of download. Printed on 26/08/2018 (ID 625)

©2018 | PR INDUSTRIAL s.r.l. | All rights reserved | Image shown may not reflect actual package. Specifications subject to change without notice